REV.	BY	DATE	P/N	TB225-USB

PHYSICAL SPECIFICATIONS

BALL DIAMETER ---------- 2.25"

BALL ROTATION --------- CONTINUOUS IN ALL DIRECTION

TRACKING FORCE ---------- 12g

WEIGTH ---------- 460g

LIFE CYCLE (BALL ROTATIONS) ---------- 5,000,000

OPERATING TEMPERATURE ----------40°C TO +85°C

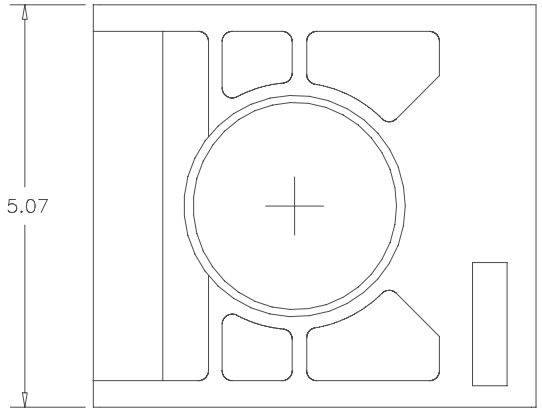

ELECTRICAL SPECIFICATION

USB 1.1 INTERFACE NO DRIVER NEEDED.

SUPPLY VOLTAGE (USB BUS)---------- 5V ±.5V D.C

SUPPLY CURRENT (USB BUS)---------- 25mA MAX

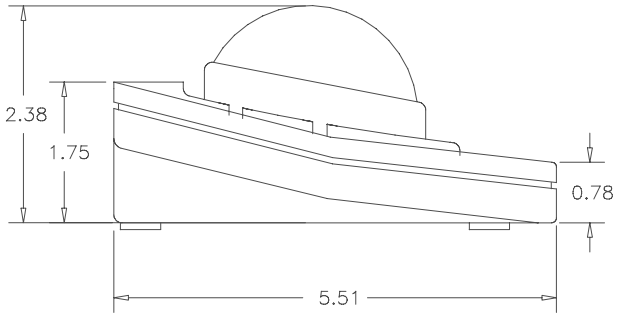

STANDARD FEATURES

NON-CONTACTING OPTICAL ENCODERS

CLICK AND CLICK LOCK INPUTS

POLISHED STAINLESS STEEL SHAFTS

CARTRIDGE STAINLESS STEEL BEARING

STANDARD USB CONNECTOR

SCALE	DATE:	1-12-07			TITLE	PART NO.
NONE	BY	AT	ETI SYSTEMS	ETI SYSTEMS CARLSBAD CALIFORNIA	TRACKBALL	TB225-USB
	APPRV'D					
CODE IDENT: 19477						